HotLok® 4OU, 5X MAC MINI, 2X PASSTHRU, 1X BLANK, PANEL KIT

Part Number HL4OU-521

Applications

The HotLok 4OU, 5X Mac Mini, Panel Kit is a 4OU OCP rack mount panel assembly featuring slide out trays designed to accept up to (8) M4 or M4 Pro Mac Minis, (Mac Minis not included).

Multiple configurations are available. The HL4OU-521 Panel Kit comes with (5) slide-out trays, (2) cable pass thrus and (1) blanking panel.

The individual slide out trays can be removed without tools allowing easy access to the Mac Mini for power on/off button resets or swap outs.

The Mac Minis forward mounted position directly faces the cold aisle, providing operational indicator viewing and access to the USB-C receptical and headphone jack.

The Panel Kit has intake ports so the Mac Mini cooling fans can draw conditioned air directly from the cold aisle.

The highly configurable 4OU Panel Kit can be provided with cable pass thru and/or blanking panles for unpopulated spaces.

The HotLok 4OU OCP rack mount panel panel kit also features optional wireform cable retention.

Features

- Individual slide-out trays designed to accept up to (8) M4 or (8) M4 Pro Mac Minis (Mac Minis not included).
- Toolless slide-out trays provide easy access to the Mac Mini for power on/off button resets or swap outs.
- Operational indicator viewing window with access to the front ports.
- Cold aisle conditioned air directly available to the fan intakes.
- Optional Cable Pass Through and Blanking Panels.
- Optional wireform cable retention.
- Panel window



Benefits

- Provides the ability to rack mount up to (8) Mac Minis.
- Offers easy access to rack mounted Mac Minis. No need to remove panel assembly.
- Visual confirmation that the Mac Mini is operational from the front of the rack.
- Cooling airflow pattern is compatable with a cold and hot aisle configuration, supports optimum cooling effectivness and efficiency.
- Brush sealed cable pass through panels provide easy cable routing while maintaining separation between the cold and hot aisle.
- Cable retention keeps wires organized and prevents accidental disconnect.

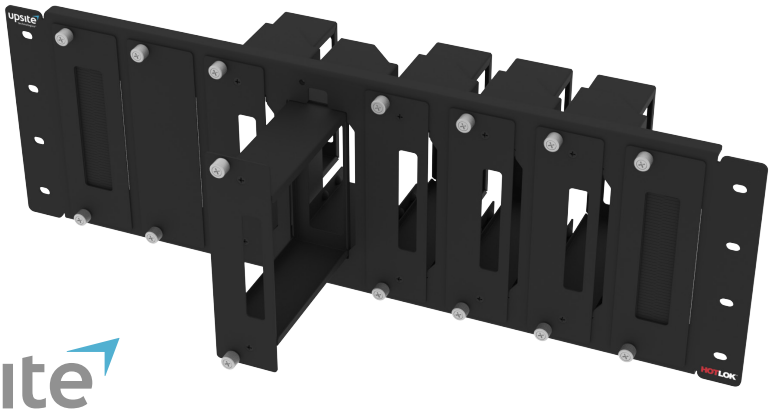

upsite technologies®

888-982-7800

sales@upsite.com

Specifications

Part Number	Description	Panel Assembly Dimensions	Shipping Dimensions	Shipping Weight
HL4OU-521	4OU, 5X MAC MINI, 2X PASSTHRU, 1X BLANK, PANEL KIT	23.8" x 5.1" x 7.5" (605mm x130mm x 191mm)	26"L X 8"W X 8"H (660mm X 203mm X 203mm)	7 lbs.

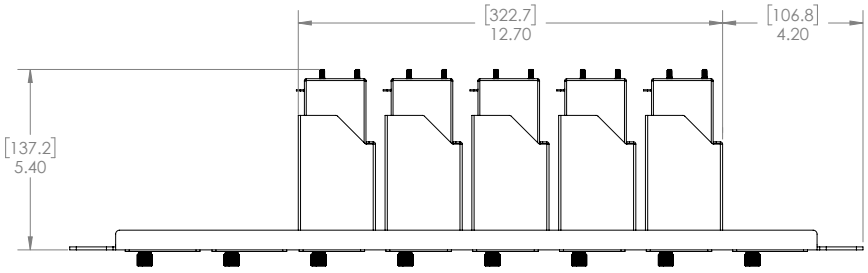

TOP VIEW

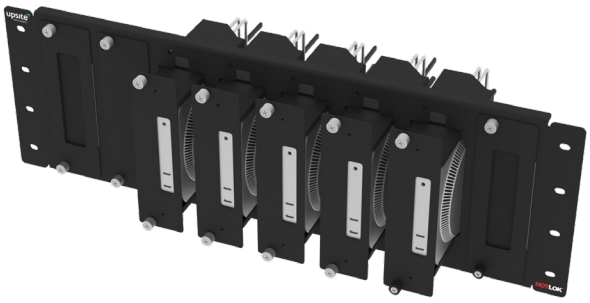

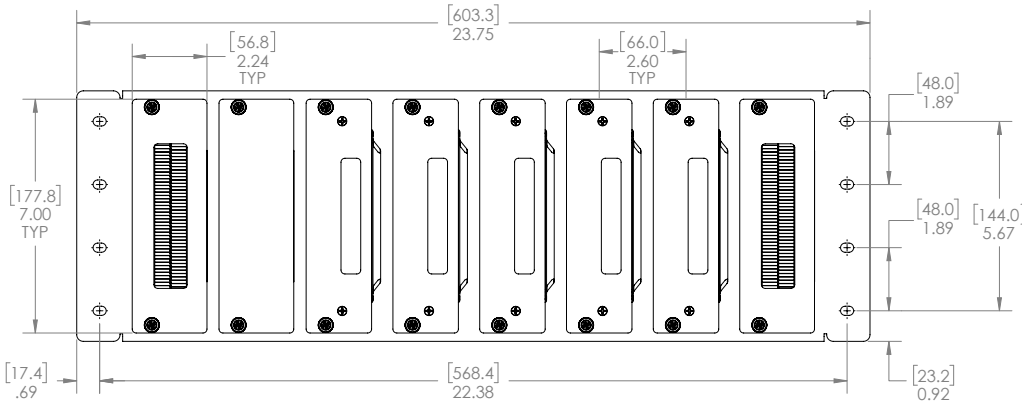

FRONT VIEW

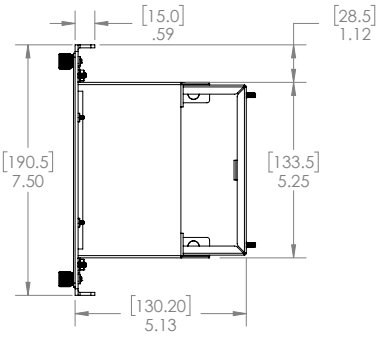

RIGHT VIEW

Materials

Panel Kit: Aluminum and steel construction
Finish: Black Powdercoat



upsite technologies®
888-982-7800
sales@upsite.com